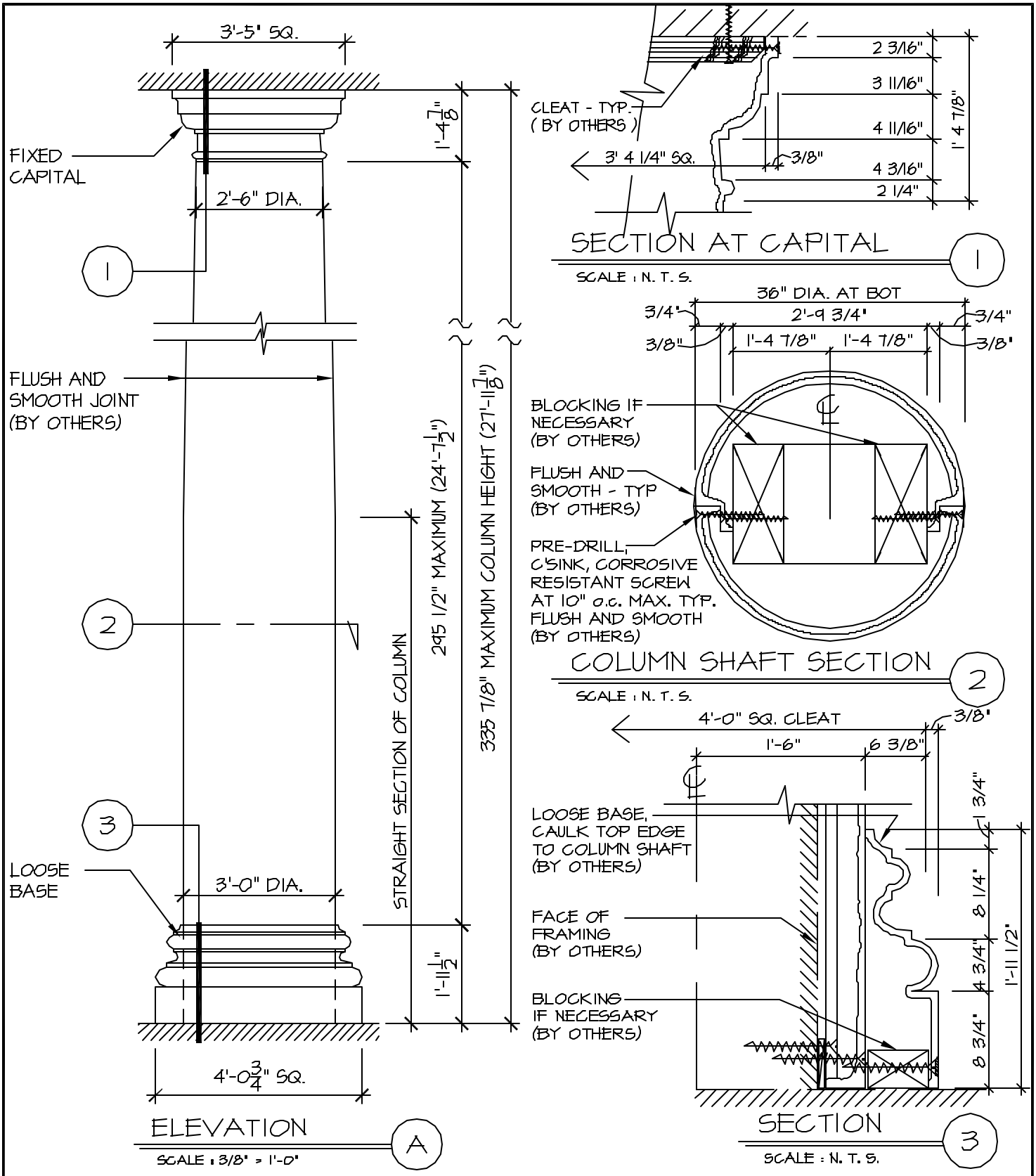

A Division of DEC Associates, Inc.

CORPORATE HEADQUARTERS
18 TECHNOLOGY DRIVE
SUITE #134
IRVINE, CA 92618
PH: 949 - 502 - 3321
FX: 949 - 502 - 3319

info @ decassociates . com
www @ decassociates . com

PROJECT:	36" DIAMETER	SHEET NO.
	ENTASIS COLUMN W/ ATTIC BASE	C-236B
JOB NO:	FIXED CAP & LOOSE / SPLIT BASE	
TITLE:	FULL ROUND / SPLIT	
TITLE:	STANDARD PRODUCT LINE	PAGE
SCALE: AS SHOWN	DRAWN BY: —	OF